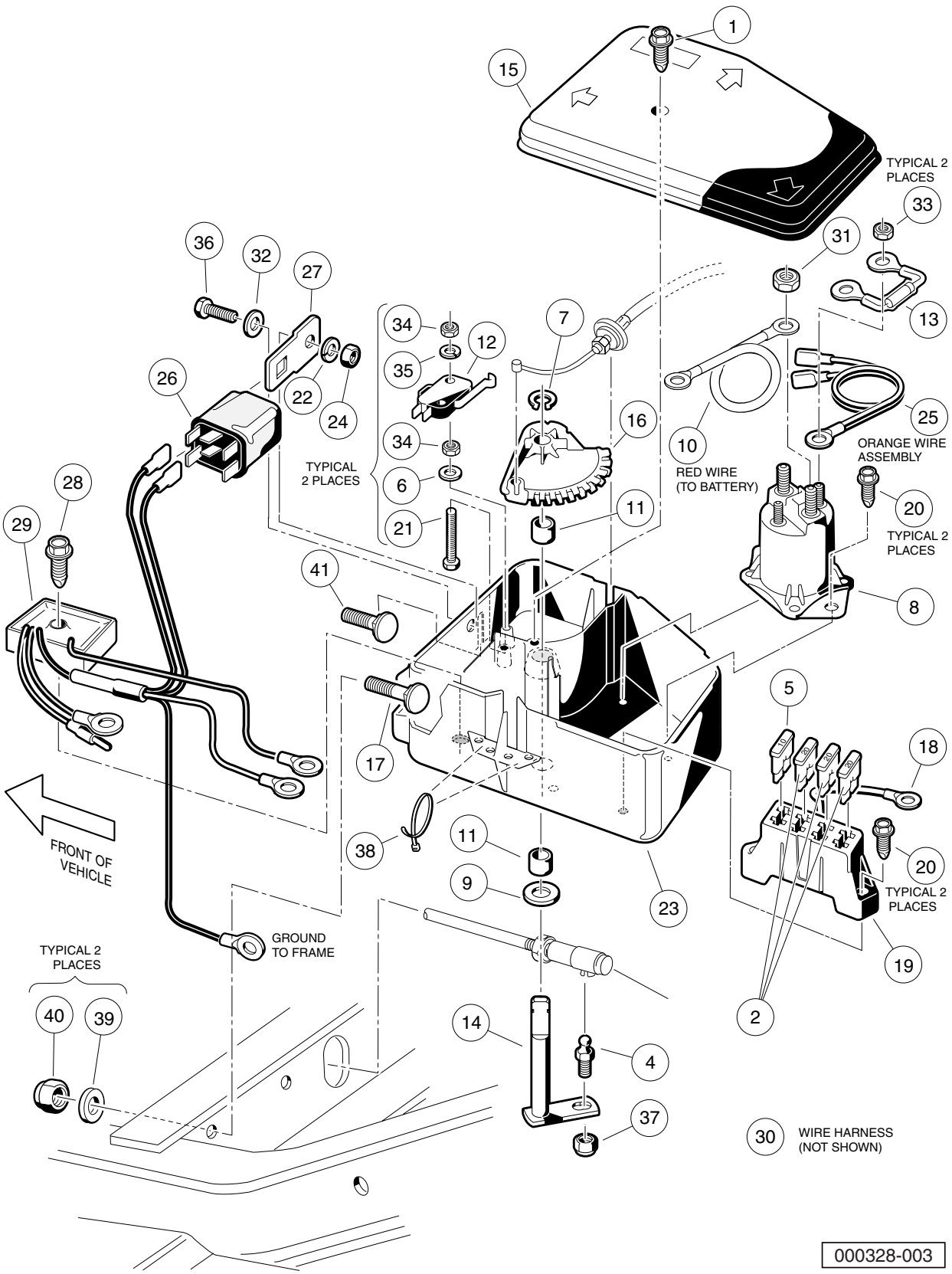
1
15
TYPICAL 2 PLACES
33
31
13
36
32
27
34
12
7
35
26
22
24
16
25
10
ORANGE WIRE ASSEMBLY
34
TYPICAL 2 PLACES
6
RED WIRE (TO BATTERY)
28
20
29
21
11
TYPICAL 2 PLACES
41
8
5
18
17
FRONT OF VEHICLE
38
11
20
9
23
TYPICAL 2 PLACES
GROUND TO FRAME
19
TYPICAL 2 PLACES
40
39
2
14
4
37
30
WIRE HARNESS (NOT SHOWN)
000328-003

ELECTRICAL COMPONENT BOX

ITEM	PART NO.	DESCRIPTION	QTY
		1 2 3 4	
1	1015752	Screw, #12-16 X 0.625 Hi-Lo	1
2	1016423	Fuse, 20-Amp	3
3	N/A	Asm, Electrical Component Box (includes items 4 through 38)	1
4	1010954	Stud, 1/4-28 X 0.560 Ball	1
5	1012295	Fuse, 10-Amp	1
6	1012431	Washer, #4 Flat	2
7	1013589	Ring, 0.338" Internal Retaining	1
8	1013609	Solenoid, 12-Volt	1
9	1014065	Washer, 0.38" ID Delrin Flat	1
10	1014119	Wire Assembly #6 Red	1
11	1014145	Bushing, Secondary Weight, Split	2
12	1014807	Switch, Limit	1
13	1014948	Diode	1
14	1015345	Bell Crank and Shaft Assembly	1
15	1015372	Cover, Electric Box	1
16	1015373	Cam, Electric Box	1
17	1015405	Bolt, Carriage, 5/16-18 X 2.0	1
18	1015737	Wire Assy, #10 Red	1
19	1015741	Fuse Block	1
20	1015752	Screw, #12-16 X 0.625 Hi-Lo	4
21	1015878	Screw, #4-40 Hex Head Machine	2
22	1016	Washer, #10 Split Lock	1
23	1016997	Electrical Component Box	1
24	1017	Nut, #10-24 Stainless-Steel Hex Machine	1
25	N/A	Wire Assembly Orange #18	1
26	1017239	Relay	1
27	1017243	Mounting Bracket, Relay	1
28	101856102	Screw, 1/4-15 X 1.50 Hi-lo Hex	1
29	102803401	Asm, Voltage Regulator Key Sta	1
30	103197301	Asm, Wire Harness, Stretch, Gas	1
31	1242	Nut, 5/16-18 Hex	2
32	183	Washer, #10 Type A Flat	1
33	7893	Nut, #10-32 Hex	2
34	8057	Nut, #4-40 Hex Machine	4
35	8058	Lockwasher, #4 Helical Split	2
36	8450	Screw, #10-24 X 0.50 Hex-Head	1
37	8717	Locknut, 1/4-28 Nylon Insert	1
38	8990	Tie Wrap, 8" Nylon	3
39	1241	Washer, 5/16 Type A Flat	2
40	7473	Locknut, 5/16-18 Nylon Insert	2
41	7818	Bolt, Carriage, 5/16-18 X 1.5	1