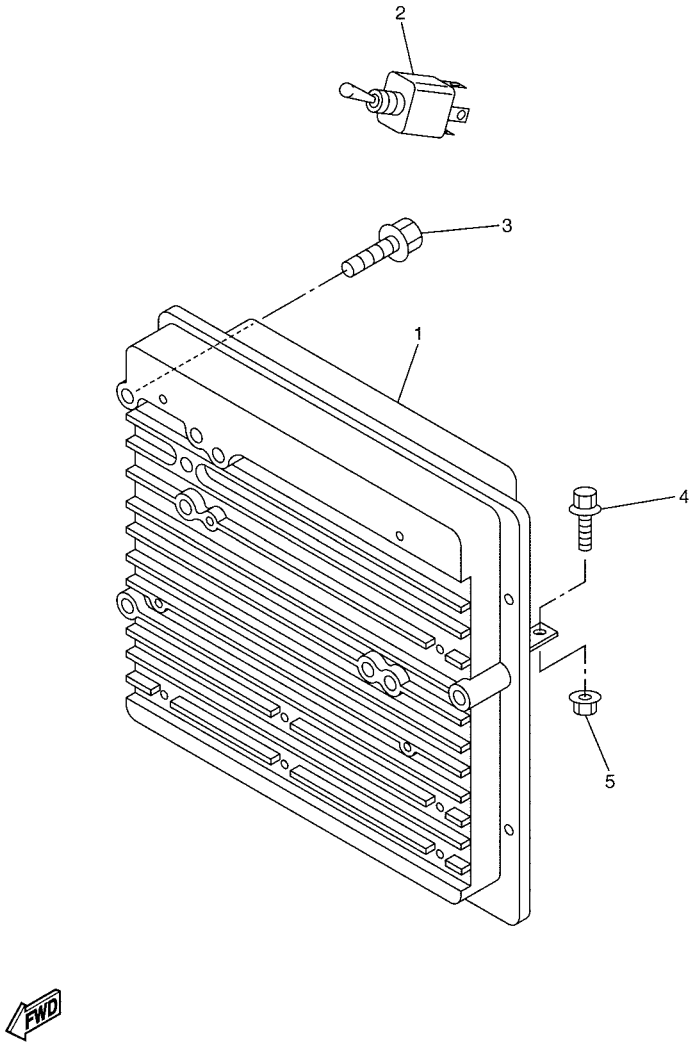

JW21100-E150

FIG. 15 CONTROLLER 1

REF. NO.	PART NO.	DESCRIPTION	JW21					REMARKS
1	JW2–H6510–00	MOTOR CONTROL UNIT ASSY	1					
2	JU2–H2727–00	SWITCH	1					
3	9582P–06040	BOLT, FLANGE	3					
4	9582P–06016	BOLT, FLANGE	3					
5	9560P–06200	NUT, FLANGE	3					